2.4 GENERATOR TROKUTNOG NAPONA

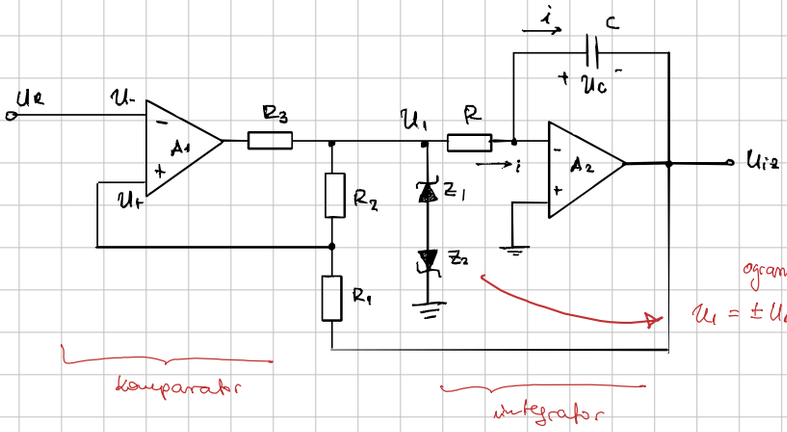

ograničavaju u_1

$u_1 = \pm U_1 = \pm (U_Z + U_D)$

Superpozicija = 1 gledamo, 1 spojamo na masu

$$u_+ = u_1 \cdot \frac{R_1}{R_1+R_2} + u_{iz} \cdot \frac{R_2}{R_1+R_2}$$

u_1 se skokovito mijenja između poz i neg vrijednosti

(K.S. u_{iz}) (K.S. u_R)

Komparator

1 $\underline{u_1 = -U_1}$ napon u_1 u niskoj razini $\Rightarrow$ u_{iz} linearno raste (integrator)

$$u_+ = -U_1 \frac{R}{R_1+R_2} + u_{iz} \cdot \frac{R_2}{R_1+R_2}$$

u nekom trenu u_+ će se izjednačiti sa u_R, u_{izmax}

$$u_+ = u_R = -U_1 \frac{R_1}{R_1+R_2} + u_{izmax} \frac{R_2}{R_1+R_2}$$

$\Rightarrow$ promjena stanja: $u_1 \Rightarrow +U_1$

$$\dashrightarrow u_{izmax} = u_R \left(1 + \frac{R_1}{R_2}\right) + U_1 \cdot \frac{R_1}{R_2} \quad (1)$$

$$u_{+max} = +U_1 \cdot \frac{R_1}{R_1+R_2} + u_{izmax} \frac{R_2}{R_1+R_2}$$

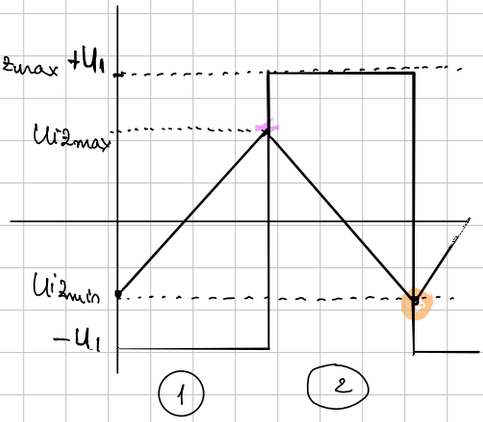

2 $\underline{u_{iz} = +U_1}$ $\Rightarrow$ u_{iz} linearno opada

$$u_+ = U_1 \frac{R_1}{R_1+R_2} + u_{iz} \frac{R_2}{R_1+R_2}$$

u jednom trenu u_+ se opet izjednači sa u_R

$$u_+ = u_R = U_1 \frac{R_1}{R_1+R_2} + u_{izmin} \frac{R_2}{R_1+R_2}$$

$$\dashrightarrow u_{izmin} = u_R \left(1 + \frac{R_1}{R_2}\right) - U_1 \frac{R_1}{R_2} \quad (2)$$

$\Rightarrow$ Promjena stanja: $u_1 \Rightarrow -U_1$

$$u_{+min} = -U_1 \cdot \frac{R_1}{R_1+R_2} + u_{izmax} \frac{R_2}{R_1+R_2}$$

PRIJENOSNA KARAKT. KOMPARATORA

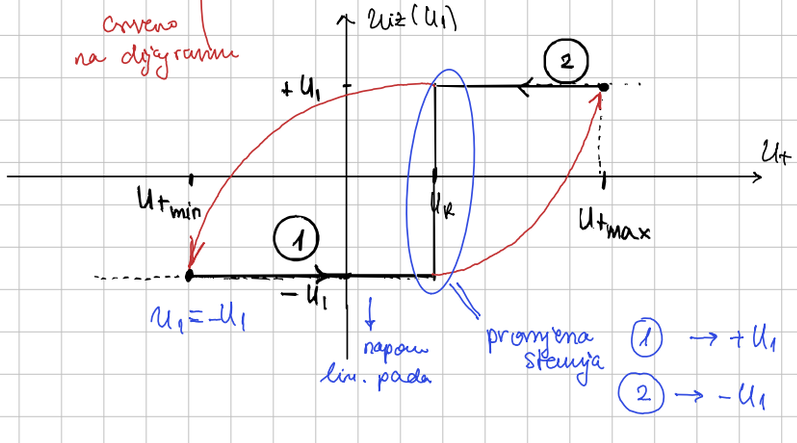

ZNAČAJKE TROKUTNOG SIGNALA

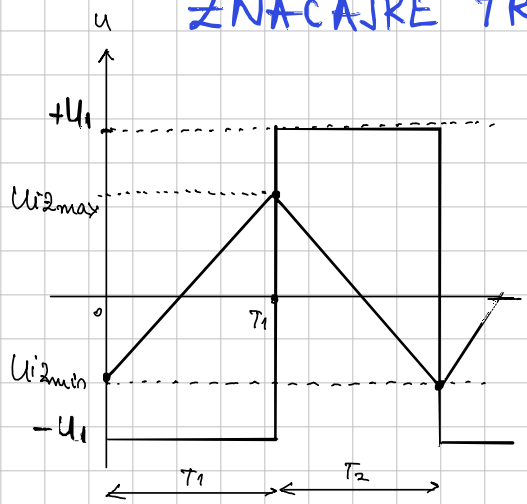

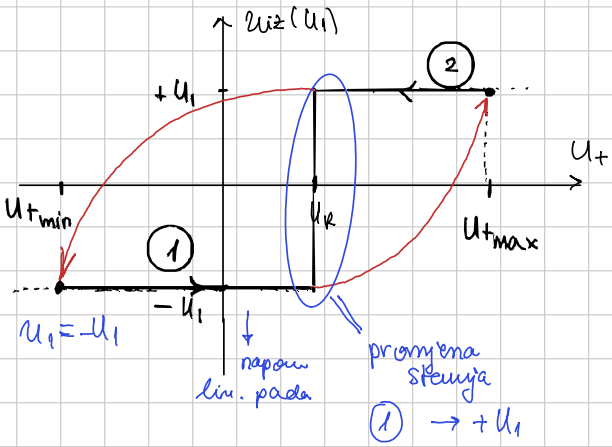

$$\Delta U_{iz} = U_{izmax} - U_{izmin} = 2U_1 \frac{R_1}{R_2} \quad \text{(amplituda)}$$

$$U_{SR} = \frac{U_{izmax} + U_{izmin}}{2} = U_R\left(1 + \frac{R_1}{R_2}\right) \quad \text{(srednja vr)}$$

vremenska konst τ se ne mijenja za U_- i U_+ → $\underline{T_1 = T_2}$

Integrator

$u_{iz}(t) = -U_c(t)$

$$u_{iz}(t) = \frac{-1}{C}\int_0^t i(t)\,dt - U_{c0} = \frac{-1}{C}\int_0^t \frac{U_1(t)}{R} - U_{c0}$$

$\boxed{0 \le t \le T_1}$ $\quad U_1 = -U_1$

$$u_{iz}(t) = \frac{U_1}{RC}\int_0^t dt + U_{izmin} = \frac{U_1}{RC}\cdot t + U_{izmin} = u_{iz}(t)$$

$\underline{t = T_1}$

$$u_{iz}(T_1) = \frac{U_1}{RC}\cdot T_1 + U_{izmin} = U_{izmax}$$

$$\Rightarrow T_1 = \underbrace{(U_{izmax} - U_{izmin})}_{\Delta U_{iz}}\frac{RC}{U_1} = 2\cdot \cancel{U_1}\frac{R_1}{R_2}\cdot\frac{RC}{\cancel{U_1}} \rightarrow \boxed{T_1 = 2RC\frac{R_1}{R_2}}$$

$$T = T_1 + T_2 = 2T_1 = 4RC\frac{R_1}{R_2} = T$$

Primjer 10.9)

$U_1 = 5V$, $R = 10k\Omega$ $f = 10kHz$ $\Delta U_{iz} = 5V$ $U_{SR} = 1V$

$$\Delta U_{iz} = 2U_1 \frac{R_1}{R_2} \longrightarrow \frac{R_1}{R_2} = \frac{\Delta U_{iz}}{2U_1} = \frac{\cancel{5}}{2 \cdot \cancel{5}} \rightarrow \frac{R_1}{R_2} = \frac{1}{2}$$

$$U_{SR} = U_R \cdot \left(1 + \frac{R_1}{R_2}\right) \Rightarrow U_R = \frac{U_{SR}}{1 + \frac{R_1}{R_2}} = \frac{1}{1 + 0{,}5} = \frac{2}{3} \Rightarrow \underline{\underline{U_R = 0{,}667V}}$$

$$f = \frac{1}{T} = \frac{1}{4RC \cdot \frac{R_1}{R_2}} \qquad C = \frac{1}{4 \cdot R \cdot f \cdot \frac{R_1}{R_2}} = \frac{1}{4 \cdot 100 \cdot 10^3 \cdot 10^3 \cdot \frac{1}{2}} = \frac{1}{2 \cdot 10^8}$$

$$\underline{\underline{C = 5 \times 10^{-9} = 5nF}}$$